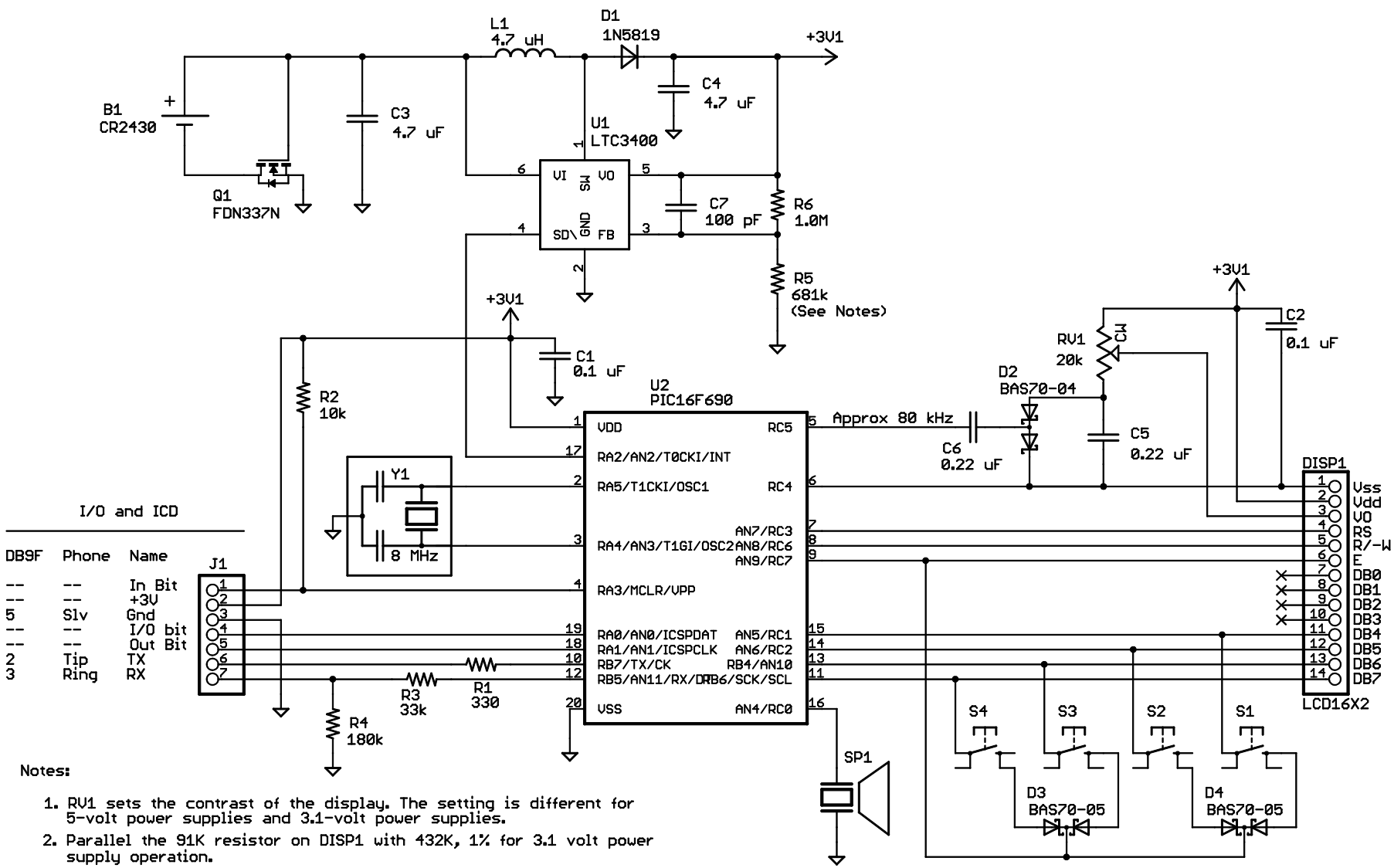

I/O and ICD

DB9F	Phone	Name
--	--	In Bit
--	--	+3V
5	Slv	Gnd
--	--	I/O bit
--	--	Out Bit
2	Tip	TX
3	Ring	RX

Notes:

1. RV1 sets the contrast of the display. The setting is different for 5-volt power supplies and 3.1-volt power supplies.
2. Parallel the 91K resistor on DISP1 with 432K, 1% for 3.1 volt power supply operation.
3. Power supply voltage — Value of R5

Power supply voltage	Value of R5
3.1 volts	681K, 1%
3.3 volts	619K, 1%
5.0 volt	324K, 1% or 681K, 1% in parallel with 619K, 1%

4. The 14-pin connector on DISP1 has the plastic connector body on the glass side of the LCD module.
5. Mount DISP1 using 2 pieces of 0.5" by 0.2" by 1/16" thick foam tape on the ends of the LCD PCB.

TITLE: Terse_Term	
Document Number: Rho 15863	REV:
Date: 6/21/2008 08:04:28p	Sheet: 1/1